COBHAM

SAILOR SP3515 Portable VHF with Scrambler and CTCSS

User manual

Emergency procedure

- Turn the knob at the top of the radio clockwise. The display lights up showing the last used channel and the battery level.

- Select channel 16 (Distress or Safety), press the **16/C key**.

- Press the PTT and say:
  - "MAYDAY, MAYDAY, MAYDAY",
  - "This is"..... ships name repeated three times
  -
  - "MAYDAY"
  - "This is"..... ships name and call sign,
  - The ship's position in latitude and longitude or other reference to a known geographical location,
  - The nature of distress and assistance wanted,
  - Any other information which might facilitate the rescue.
  - "OVER"
- Release PTT and listen for answer.

SP3515 VHF

Document number: 98-124293-M

Release date: October, 2013

Copyright: © 2013 Thrane & Thrane A/S. All rights reserved.

Trademark Acknowledgements

- **SAILOR** is a registered trademark of Thrane & Thrane A/S.
- **Other product and company names** mentioned in this manual may be trademarks or trade names of their respective owners.

Warranty limitation

IMPORTANT - The radio is a sealed waterproof unit. To create and maintain its waterproof integrity it was assembled in a controlled environment using special equipment. The radio is not a user maintainable unit, and under no circumstances should the unit be opened except by authorized personnel. Unauthorized opening of the unit will invalidate the warranty.

Disclaimer

Any responsibility or liability for loss or damage in connection with the use of this product and the accompanying documentation is disclaimed by Thrane & Thrane A/S. The information in this manual is provided for information purposes only, is subject to change without notice and may contain errors or inaccuracies. Manuals issued by Thrane & Thrane A/S are periodically revised and updated. Anyone relying on this information should acquire the most current version e.g. from www.cobham.com/satcom or from the distributor. Thrane & Thrane A/S is not responsible for the content or accuracy of any translations or reproductions, in whole or in part, of this manual from any other source.

Thrane & Thrane A/S is trading as Cobham SATCOM.

Precautions

Avoid water and salt in the I/O connector and keep it clean frequently.

Only use original Thrane & Thrane battery packs. Make sure they are clean and dry before attaching the transceiver. Be careful not to damage any gaskets.

Only use the original Thrane & Thrane charger for the rechargeable battery.

Be very careful when handling the Lithium batteries. With correct use they are safe but any misuse might cause dangerous situations.

Never short circuit the battery terminals, never expose the transceiver and the batteries to extreme temperature or fire and never use any kind of violence.

Avoid close contact between the antenna and parts of the human body. The top of the antenna must never be closer than 5 cm to the body when transmitting.

Do not submerge the transceiver more than 1 m for 30 minutes.

Keep the transceiver at least 0.3 m away from the magnetic compass.

Training information

SAILOR SP3515 VHF is designed for "occupational use only". It must be operated by licensed personnel only.

The SP3515 complies with the FCC RF exposure limits for "Occupational Use Only".

- FCC OET Bulletin 65 Supplement C, evaluating compliance with FCC guidelines for human exposure to radio frequency electromagnetic fields.
- American National Standards Institute (C95.1) IEEE standard for safety levels with respect to human exposure to radio frequency electromagnetic fields, 3 kHz to 300 GHz.
- American National Standards Institute (C95.3) IEEE recommended practice for the measurement of potentially hazardous electromagnetic fields - RF and microwaves.

Warning! Your Thrane & Thrane VHF radio generates electromagnetic RF (radio frequency) energy when transmitting. To ensure that you are not exposed to excessive amounts of energy and thus to avoid health hazards from excessive exposure to RF energy, all persons must be at least 5 cm away from the antenna when the radio is transmitting.

Correct use

For best performance, hold the radio vertically and 10 cm away from the head when talking into the microphone.

Contents

Chapter 1 Introduction

Your VHF 1

Performance 2

Channels 2

Chapter 2 Operation

Controls 5
Keys and buttons 5
The display 7

Using the VHF 8
Basic functions 8
Other functions 11

Chapter 3 Batteries

Battery level indication 15
Removing and inserting the battery pack 15
The battery charger 16
Installing the charger 16
Recharging the battery 17

Chapter 4 Configuring the radio

Configuration mode 19
Entering and using configuration mode 19
List of configuration settings 20

Chapter 5 Equipment and accessories

External equipment 27
List of equipment 27
Connecting external equipment 27
Impact on radio operation 28
Accessorie connector 28

Accessories 29
List of accessories 29
Attaching and removing the belt clip 31
Attaching the lanyard 31

Chapter 6 Troubleshooting

Displaying errors 33

App. A Technical specifications

Technical data SP3515 35
General 35
Transmitter 36
Receiver 36

Battery life guidelines 38

Dimensional drawing, transceiver 39

Dimensional drawing, chargers 40
Mounting Possibillities 40

Declaration of Conformity 41

App. B Attention

Goretex Membran 43

Introduction

Your VHF

The SP3515 VHF is designed for flexibility in daily use. It connects easily to external equipment like headsets and fist mikes, making the SP3515 suitable for any noisy environment.

Main features:

- Unique man machine interface, an excellent grip even with gloves, and large tactile buttons.
- Display with red adjustable backlight which makes the display visible even at night.
- Built-in “sleep” function, minimizing power consumption and improving battery lifetime.
- Selectable 12.5 kHz narrow band or 25 kHz wide band operation.
- Scrambling function for privacy calls.
- CTCSS function for selective opening of Squelch.
- A lanyard and belt clip included.

A huge accessory program comes with the SAILOR SP3500 series.

Please find the nearest SAILOR distributor on www.thrane.com.

Performance

For best performance of the transceiver keep the following in mind:

- Keep clear of metal environment.
- Hold the transceiver vertically and 10 cm from lips and push the PTT when transmitting.
- In receive mode carry the transceiver vertically with belt clips.
- To preserve battery power, adjust squelch to close the loudspeaker when there is no signal.
- If you are in a lifeboat keep the antenna as high as possible.

Channels

This radio operates default with the following channel designators (see also ITU-R M.1084-4), depending on the configuration (see the notes on the next pages):

1	9	17	25	60	68	77	85
2	10	18	26	61	69	78	86
3	11	19	27	62	71	79	87
4	12	20	28	63	72	80	88
5	13	21		64	73	81	
6	14	22		65	74	82	
7	15	23		66	75	83	
8	16	24		67	76	84	

US W-ch.		CA W-ch.
W1	W8	W1
W2	W9	W2
W3	W10	W3
W4		
W5		
W6		
W7		

Channel modes

The notes in the following sections list the channel restrictions that apply for each channel mode.

For information on how to select a channel mode, see Entering and using *Configuration mode* on page 19 and *CHAN* on page 20.

National frequency regulations shall always be respected and might restrict operation for this type of equipment.

International channels

Note:
Tx power is limited to 1 W on channels 75 and 76.

US channels

Notes:

- Tx power is limited to 1 W on channels 13, 67 and 77.
- The channels 2, 3, 4, 60, 61, 62, 64, 75 and 76 cannot be selected.
- The Weather channels (US W-ch. in the channel table) can only be used in Rx direction.
- Channel 15 can only be used in Rx direction. Tx direction is blocked.
- The channels 1, 5, 7, 18, 19, 21, 22, 23, 63, 65, 66, 78, 79, 80, 81, 82 and 83 may only be used as simplex channels (and is marked A). Channel 20 may be used as semi-duplex and simplex as 20A.

Canadian channels

Notes:

- Tx power is limited to 1 W on channels 15, 17, 20, 65, 66 and 77.
- The channels 19, 22, 63, 75, 76 and 81 cannot be selected.
- The Weather channels (CA W-ch. in the channel table) can only be used in Rx direction.
- The channel 21 can only be used in Rx direction, marked 21B. Tx direction is blocked.
- The channels 4, 5, 7, 18, 19, 21, 22, 61, 62, 64, 65, 66, 78, 79, 80, 81 and 82 may only be used as simplex channels (and marked A). Channel 83 may be used as simplex 83A for transmission and 83B for listening only.

Inland Waters (BI) channels

Notes:

- Tx power is limited to 1 W on channels 15 and 17.
- ATIS function is enabled on all channels.
- Dual watch and Scanning modes are disabled.

ATIS is automatically transmitted after each transmission in Inland Waters. See *ATIS* on page 22 for information on how to program the call sign.

Operation

Controls

Keys and buttons

1. On/off/volume
2. Light/Lock
3. Push To Talk (PTT)
4. Up key
5. Down key
6. Hi/Lo output power
7. Squelch
8. Scan
9. Priority channel (16)/ Call channel
10. Loudspeaker/microphone

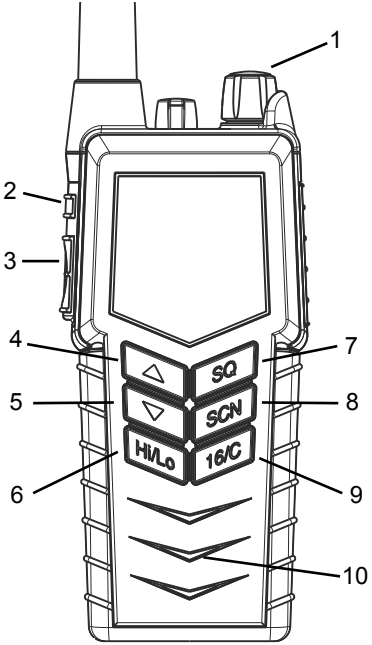

Key presses

Pressing and holding certain keys gives access to additional functions, shown in the table below.

Key	Short press (1 beep)	Long press (2 beeps)	Extra long press (3 beeps)
▲ ▼	Show next available item in the list (up or down). Default: Channel selection	Run through available items, **or** select tagged channels A (▼) or B (▲).	Run through available items if an A or B channel is tagged
SQ	Activate Squelch control (Adjust with up/down arrows).	Monitor function. Open Squelch completely. Set period of time in configuration mode.	
SCN	1 press: Activate/ terminate Dual/Triple watch. 2 presses: Activate memory scan.	Add/Delete channel from memory scan.	
Hi/Lo	Toggle between high and low transmitter power.		
16/C	Select channel 16.	Select programmed Call channel.	Program Call channel.

The display

The display holds various fields of information, explained below.

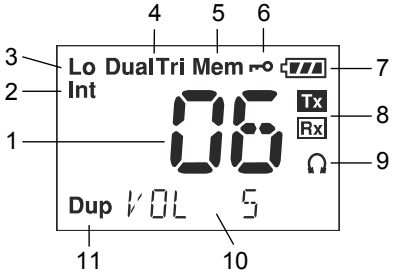

1. Current working channel.
2. Current channel mode.
3. "Lo": Reduced transmitter power.
   Full transmitter power is not shown in display.
4. Dual/Triple watch activated.
5. Current working channel is marked for scanning.
6. Keypad is locked.
7. Battery level indicator.
8. Transmitting (Tx) /Receiving (Rx).
9. Accessory is connected.
10. Service line for various purposes. In this example the volume level.
11. Semi-duplex channel.

Using the VHF

Basic functions

Note Before using the radio, mount the antenna at the top of the radio. The antenna is delivered with the radio.

Switching the radio on and off

- **To switch the radio on**, turn the knob at the top of the radio **clockwise**.
  The display lights up showing the last used channel and the battery level.
- **To switch the radio off**, Turn the knob back **counter-clockwise** until it clicks.

Selecting the working channel

- To select **channel 16** (Distress or Safety), press the **16/C** key.
- To select the **Call channel**, use a long press on **16/C**.
- To select among **all available channels**, press ▲ or ▼ on the keypad. For fast selection, press and hold ▲ or ▼.

The display shows the currently selected channel. The bottom left corner of the display shows "`Dup`" if the channel is a semi-duplex channel.

Note Long press on ▲ or ▼ can also be used to select preferred channels. For information on how to program preferred channels, see *Configuring the radio* on page 19.

Activating a call

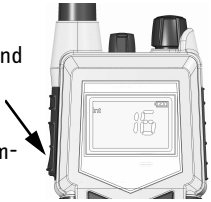

To **activate a call** to the selected channel, press and hold the **PTT** button on the side of the radio.

The radio transmits as long as the PTT button is pressed. A small **Tx** sign next to the channel number indicates when the radio is in transmit mode.

Adjusting the volume

- **To increase** the volume, turn the on/off knob at the top of the radio **clockwise**.
- **To decrease** the volume, turn the knob **counter-clockwise**.

The display shows the level of the volume, e.g. "VOL 5", while it is adjusted.

Using Squelch control

- **To activate** Squelch control, press the **SQ** key.
- **To set** the Squelch level, press ▲ (closing) or ▼ (opening). The display shows the Squelch level while it is adjusted, e.g. "SQ 5".

Adjusting the display backlight

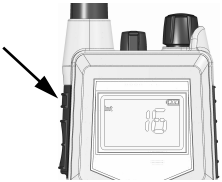

- **To turn on** the backlight, press the **Light/Lock** button on the side of the radio.
- **To adjust** the backlight level, press ▲ or ▼ within 3 seconds after turning on the light. The display shows the level while it is adjusted, e.g. "DIM MED".

Using Dual/Triple watch

- **To activate** Dual/Triple watch, press the **SCN** key.
  The display shows "`Dual`" or "`Tri`" at the top and "`16`" at the bottom right. The radio toggles between the selected channel and channel 16 in Dual watch. In Triple watch, the radio shifts between channel 16, the call channel and the selected channel.
  To select whether the SCN key should activate Dual or Triple watch, refer to Configuring the radio on page 19.
- **To terminate** Dual watch, press **SCN** again.

Scanning channels

- **To activate** scanning memory, press 2 times **SCN** within 2 seconds. During scanning, the display shows "`SC`" in the channel field. The radio toggles between channel 16 and each of the channels marked for scanning.
- **To terminate** scanning, press **SCN** once.

Changing the transmitter power

To change the transmitter power, press the **Hi/Lo** key. The display shows "`Lo`" when power is set to low. Otherwise maximum power is used.

Locking the keypad

- **To lock** the keypad, press and hold the **Light/Lock** button. The display shows a key symbol when the keypad is locked.
- **To unlock** the keypad, press and hold the **Light/Lock** button again.

Other functions

Programming the Call channel

To program the Call channel, do as follows:

1. Press and hold **16/C** until the current Call channel number is flashing.
2. Select the channel with ▲ or ▼.
3. Press **16/C** to confirm within 3 seconds.

Programming the scanning memory

To add a channel to the scanning memory, select the channel and then press and hold the **SCN** key until the display shows MEM at the top.

To remove a channel from the scanning memory, select the channel and then press and hold the **SCN** key until the MEM sign disappears from the display.

Low power operation

The radio can be operated in low power mode. In this mode battery life time is dramatically increased. Up to the first second of a received call might be lost if this mode is selected. Refer to *SLEEP* on page 21.

Continuous Tone Coded Squelch System

Selective squelch opening by sub-tone detection (CTCSS) can be enabled, using the configuration mode (see CTCSS on page 24). Please note that if the radio is operating with CTCSS on a channel, and a carrier is received, it may not be recognized in the loud speaker if the matching sub-tone is not detected. For this reason, be very careful not to use CTCSS programmed channels in emergency situations. For the same reason

transmitting is prohibited (reporting "BUSY") if a (silent) carrier containing any sub-tone is active on the channel while pressing PTT.

Channels programmed with CTCSS will have a clear identification in the service field, e.g. "CTCSS 22", while selected. Not all channels are allowed for CTCSS use.

In maritime channel modes CTCSS is automatically disabled when

- Product is turned off
- A new channel is selected

For private channels and ALT channel mode, the feature will remain until manually removed.

Scrambler

On channels where it is allowed, you can set up voice scrambling, using configuration mode (see *SCRM* on page 25).

Please note that if the radio is operating with scrambling on a channel, it is impossible to communicate with other radios that are not programmed with the same scrambler code. For this reason, be very careful **not** to use scrambled channels in emergency situations. Scrambled channels will have a clear identification in the service field, e.g. "SCRM 3", while selected. Not all regions allow the use of voice scrambling.

In maritime channel modes scrambling is automatically disabled when

- Product is turned off
- A new channel is selected

For private channels and ALT channel mode, scrambling will remain until manually removed.

Note Prior to any initiation of scrambling, the operator must always identify the calling station in clear voice (unscrambled) on that channel. Use of scrambling may also be restricted by national laws.

Narrow band operation

The radio is prepared for narrow band operation. If narrow band operation is selected (see *BAND* on page 25), the number of channels are doubled in the maritime channels, according to international recommendations. Refer to the channel table in *Channels* on page 2. Channels are clearly identified with a preceding 4- or 2-digit, while operating in narrow band mode. Narrow band radios will not always be completely compatible with wide band operating radios.

For single narrow band configured private channels or "ALT" channels, an “n” is displayed next to the channel designator.

Alive beep

To enable “ALIVE” function do as follows:

1. Select the channel where ALIVE function is desired to be transmitted.
2. Press and hold the **Hi/Lo** until you see “ALIVE ON” on the radio display. It takes approx. a second.
3. Now “ALIVE” is transmitted by a "beep" on the working channel, with approx. 4-second intervals.

To deactivate “ALIVE” function do as follows:

- Press and hold the **Hi/Lo** pressed until “ALIVE ON” no longer appears on the radio display. It takes approx. a second.

“ALIVE” function is also deactivated when

- The channel is changed.
- The radio is turned OFF and ON again.
- Watch or scanning is enabled.
- Squelch is open.

Refer to *ALIVE* on page 25

Batteries

Battery level indication

When the battery level is low, you should recharge the battery.

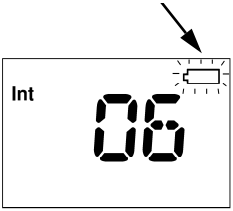

The radio display shows the battery status. When the battery symbol is empty and flashing, the battery should be recharged as soon as possible.

Removing and inserting the battery pack

To remove the battery pack, do as follows:

1. Open the safety lock as shown.
2. Remove the battery.

To insert the battery pack, attach the battery and then close the safety lock.

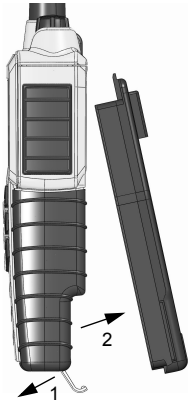

The battery charger

The chargers has two compartments.

CH3507

- A rear compartment only for storing a spare battery. It does not have a charger function.
- A front compartment for recharging the battery alone or while attached to the radio.

CH3508

- It is possible to charge a battery in rear compartment simultaneously with the radio/battery in front.

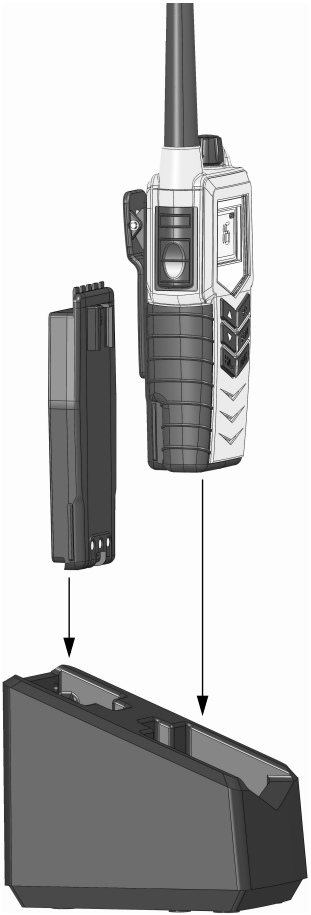

Installing the charger

Mounting the charger

There are several options for mounting one or more chargers on a table or a wall.

For information on dimensions and screw positions, refer to *Dimensional drawing, chargers* on page 40.

When mounting the charger, make sure it is placed in a dry place and away from direct sunlight. The charger is not waterproof.

Connecting to power

The charger can be supplied from DC or from AC using an AC/DC converter.

DC: Connect the 12-24VDC Connection Cable between the DC supply and the connector on the underside of the charger.

AC: Connect the AC/DC converter to the connector on the underside of the charger. Then connect the AC/DC converter to the AC outlet.

Recharging the battery

To recharge the battery, place the radio with battery or the battery alone in the front position of the charger cradle.

If the radio cannot turn on due to complete discharged battery, then **turn of** the radio and place it in the charger or charge the battery alone.

The light indicators on the charger cradle show the status as follows:

- Green light: Power is connected to the charger.
- Slow red flash: Charging in progress.
- Quick red flash (twice per second): Charging error, e.g. battery defect or temperature out of range.
- Steady red light: Charging completed. Trickle charge mode.

Charging time with emtpy battery: VHF off approx. 4 hours, VHF on: approx. 5 hours.

The battery indicator on the radio display indicates if the radio is placed in the charger while radio and charger are both powered.

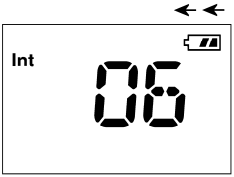

Configuring the radio

Configuration mode

Entering and using configuration mode

Note The radio is not operational in configuration mode.

- **To enter** configuration mode, press and hold the **Light/Lock** button while turning on the radio.
  The bottom line of the display shows the current menu item/setting.
- **To exit** configuration mode, turn off the radio or press any key except ▲, ▼ and the Light/Lock button.
  Using the PTT button or leaving the radio inactive for 10 seconds also causes the radio to exit configuration mode.
- **To change** a setting, press ▲ or ▼.
- **To confirm the current setting** and go to the next menu item, press the **Light/Lock** button.

List of configuration settings

The following settings are available in configuration mode.

Name	Values	Description
LIGHT	MAN	Only **Light/Lock** button activates the backlight.
	KEY	All keys and buttons, except PTT and volume control, activate the backlight.
CHAN	INT	International channels.
	US	US channels.
	CA	Canadian channels
	BI	Inland waterways. ATIS and ATIS killer is enabled. All multiple watch is disabled.
	ALT	Custom defined.
BEEP	MAX	Status click/beep sound on key press, long press (settings/programming saved) and battery alarm. Maximum level.
	MIN	Status click/beep sound on key press, long press (settings/programming saved) and battery alarm. Minimum level.
	OFF	All beeps off.
VER	X.XX.XX	Software version. Read-only.
VBAT	X.XX	Battery voltage (V). Read-only.
TEMP	XX.X	Temperature (°C). Read-only.

Name	Values	Description
SLEEP	ON	Enable sleep mode (to minimize power consumption). Sleeps for periods of 1 second after 15 seconds of idle mode. Idle mode is: no signal detected and no operation of the radio.
	OFF	Disable sleep mode.
CONTRST	1, 2, 3, 4, 5	Contrast. 1 = lowest and 5 = highest.
SHANG	OFF	Off. Resumes scanning when signal disappears.
	4, 6, 8, 10	Scan hang time (in seconds) on an active receiving working channel. The time is measured from signal detected - remains on channel even if signal disappears.
SCRES	OFF	Automatic resume deactivated.
	3, 6, 10, 15, 20, 25, 30	Scanning/watch can be automatically resumed after this time (seconds) if previously terminated with PTT.
WTCH	DUAL	Single press on the SCN key activates Dual watch.
	TRI	Single press on the SCN key activates Triple watch. If no CALL channel is programmed, “Dual” watch is activated.

Name	Values	Description
SQ	TIME	A long press on SQ opens squelch. The squelch level resumes to setting 3 seconds after SQ is released.
	MAN	A long press on SQ opens squelch. The squelch level resumes to setting as soon SQ is released.
WORK	ON	If the distress or call channel is selected using the 16/C key, any push on ▲ or ▼ will select the working channel active when 16/C was pushed.
	OFF	If on a distress or call channel, any push on ▲ or ▼ will select the channel next to the displayed channel.
ATIS	NONE	Default state if not programmed. Push ▲ to go into programming mode.
	READ	The ATIS call sign is programmed and available for read-out. Push ▲ to read the programmed ATIS value.
DDDDDDDDD		ATIS Call sign read-out. Read-only after programming once. Changing or clearing the Call sign after programming is only possible via the service interface.

Name	Values	Description
1 2 3 4 5 6 7 8 9	0-9	In ATIS programming mode: • Select the digit position with the **Light/Lock** button. • Select the digit with ▲ or ▼. • Press **Light/Lock** to confirm programming. Note: All digits must be programmed.
PREFA	OFF	Remove tag “A” for current working channel.
	ON	Tag current working channel with “A”. If another channel was previously tagged “A”, this is overruled. • The working channel can now be selected with a long press on ▼.
PREFB	OFF	Remove tag “B” for current working channel.
	ON	Tag current working channel with “B”. If another channel was previously tagged “B”, this is overruled. • The working channel can now be selected with a long press on ▲.

Name	Values	Description
SUBC	OFF	SUBC disabled. Squelch opens on all received signals.
	1, 2, ..., 38	Sub-tone carrier ID. Squelch opens if the received signal contains the desired subtone. During transmission the sub-tone with the corresponding ID is generated. Two radios on the same channel and with the same sub-tone ID, can reduce unwanted incoming traffic from other users on the same channel.
CTCSS	OFF	CTCSS disabled.
	ON	Activate CTCSS on working channel. Two radios on the same channel and with SUBC enabled, can have a certain level of privacy. Note that if you choose this option, the radio immediately exits configuration mode and starts CTCSS on the working channel.
SCODE	OFF	No scrambler code is assigned to the channel (selecting “ON” in the SCRM setting will have no effect).
	1, 2, 3, 4, 5, CC	A selection between 5 fixed sets of scrambler characteristics, and a custom code (CC), can be assigned to the channel. Note that the custom code can be defined in the service interface.

Name	Values	Description
SCRM	OFF	Scrambler disabled.
	ON	Activate scrambling on working channel. Two radios on the same channel and with scrambling enabled, can have a certain level of privacy. Note that if you choose this option, the radio immediately exits configuration mode and starts scrambling on the working channel.
BAND	25.0	Wide band operation selected.
	12.5	Narrow band operation selected. • Intercepted channels will be denoted 2XX. • Standard maritime channels will be denoted 4XX.
GROUP	SEL	Selective Mode. Squelch opens only if the programmed sub-tone is received in the signal.
	ANY	Squelch opens on reception of any of the 38 sub-tones.
ALIVE	OFF	Factory default state.
	ON	Press ▲ to set “ALIVE” on.

Name	Values	Description
ADD NAME	A-Z, 0-9	Makes it possible to name the channels. The name must contain a maximum of 9 characters, use only capital letters, digits and spaces. Press **Light/Lock** to confirm programming. Note: The name appears in the service line on the display.

Equipment and accessories

External equipment

List of equipment

The following equipment can be connected to the radio:

- SAVOX 400E Push-To Talk unit
- SAVOX C500 Fist Mike
- SAVOX NC/400 Noise-com
- SAVOX HC-E Helmet-com
- SAVOX K53004 Helmet unit
- Peltor MT7H79 Headset

We recommend to remove all accessories during emergency use.

All accessories listed might be used when body worn.

Connecting external equipment

Connect the dedicated interface cable between the external equipment and the top connector on the radio.

Interface cable	Order number
For SAVOX 400E	403500-940
For SAVOX C500	403500-950
For Peltor FL5061	403500-951

When external equipment is connected to the radio, the right side of the display will show a headset.

Impact on radio operation

The external equipment can have a built-in PTT button, speaker and microphone. Thus a connection has per default the following impact on the radio operation:

- If a speaker or earpiece is built into the detected external equipment, the sound device of the external equipment is used, and the internal radio speaker is disabled.
- The external accessory microphone is selected as audio input device, when the external PTT button is pressed. The transceiver microphone is used as audio input device when the transceiver PTT button is pressed.
- This behaviour can be changed in the service tool.

Accessorie connector

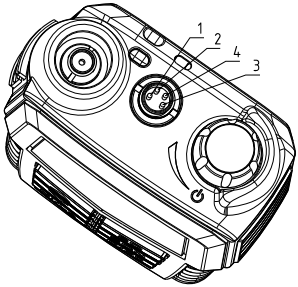

Pin 1. Loudspeaker,
minimum 8 ohm impedance.

Pin 2. Accessory power,
5V maximum 0.03A.

Pin 3. Microphone input,
Ri = 2.2kohm, 3V phantom power.

Pin 4. GND

Accessories

List of accessories

The following accessories are delivered with your radio:

Accessory	Part number
Secondary battery (black, rechargeable), B3502	403502A
Charger, CH3507	403507B
AC/DC converter, length 150cm (100-240V~ /12VDC out)	88-125538
12-24VDC Connection cable, length 150cm	37-124381
Belt clip	62-124320
Antenna	88-124370
Lanyard	41-124375
User Manual (this manual)	98-124293

Batteries, charger, AC/DC Converter and **12VDC Connection** are described in Batteries on page 15.

To mount the **antenna**, simply screw it into the threaded bush at the top of the radio.

Use of **lanyard** is only for hand held operation. Put it around the wrist to prevent dropping the radio.

Accessories you may buy

Accessory	Part number
Dual Position Charger CH3508	403508B
Leather Case	403500-205

Leather Case

Warning!

The display must always be kept away from the body to reduce the RF explosure when body worn.

Attaching and removing the belt clip

To attach the belt clip, slide the belt clip upwards into the rails at the back of the radio until it locks.

To remove the belt clip, press the projection at the top of the belt clip to release the lock and slide the belt clip downwards out of the rails.

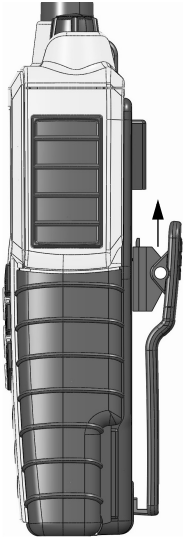

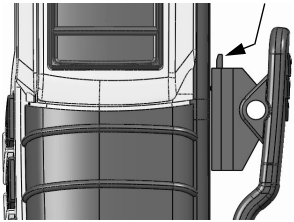

Attaching the lanyard

Do as follows:

1. Take the lanyard through the eye at the top of the radio.
2. Put one end of the lanyard through the loop at the other end of the lanyard and pull to tighten.

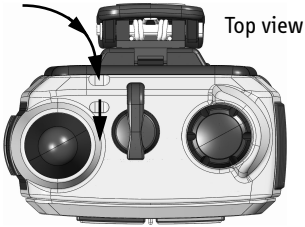

Troubleshooting

Displaying errors

Some errors result in an error message in the display. These error messages are listed below.

Display text	Problem	Type	Actions
Err EMPTY BAT	The battery voltage is below a critical level, where further operation would damage the battery.	Severe. Radio is non-functional.	Change/recharge the battery.
Err HW ERR	Hardware error.	Severe. Radio is non-functional.	Service required.
ILLEGAL	Context fails operation. This text will appear on the following occasions: • Multiple watch is selected on channel 16, or in channel regions where it is not allowed. • High power is selected on a channel where it is prohibited. • Transmission on blocked channels	Fail operation	Consider operation in a different context.

Technical specifications

Technical data SP3515

General

Item	Specification
Rx frequency range, landmobile	148.000 - 174.000 MHz
Tx frequency range, landmobile	148.000 - 174.000 MHz
Rx frequency range, maritime	155.000 - 163.425 MHz
Tx frequency range, maritime	155.000 - 161.450 MHz
Modulation 25 kHz 12.5 kHz	 16K0G3E 8K50G3E
Power supply	7.2 VDC Li battery
Current drain at 5 W Tx	1.7 A
Current drain at 1 W Tx	0.8 A
Current drain Rx max audio	0.25 A
Antenna port	50 ohm
Battery	Lithium-Ion, 1800 mAh rechargeable
Operating temperature	-20°C to +55° C

Item	Specification
Water ingress protection	IP67
Frequency stability	Better than ±0.7 kHz
Weight with emergency battery	340g

Transmitter

Item	Specification
RF output power	5 W /1 W
RF output power, Canada	4.5 W ±1 dB / 0.75 W ±1 dB
Max deviation 25 kHz 12.5 kHz	 ±5 kHz ±2.5 kHz
Spurious emission	< 0.25 uW
Adjacent channel power 25 kHz 12.5 kHz	 > 70 dB > 60 dB

Receiver

Item	Specification
Sensitivity (20 dB SINAD)	-117 dBm typical

Item	Specification
Intermodulation	
25 kHz	> 68 dB
12.5 kHz	> 65 dB
Spurious response	> 70 dB
Adjacent channel selectivity	
25 kHz	> 70 dB
12.5 kHz	> 60 dB
Audio output, internal	0.25 W at 10% dist.
Audio output, external	0.25 W/8 ohm

Battery life guidelines

Note New batteries should be placed in the charger for minimum 12 hours first time.

During daily use, always keep the battery fully charged and away from hot areas.

Keep the battery terminals dry and clean.

Never discharge beyond the specifications of the battery.

Operation/Standby time depends on usage. Generally, the more the radio is transmitting, the faster it will drain the battery. Also, the “Hi” power setting will drain the battery faster than the “Lo” setting.

Approximate figures are:

- A battery can be stored for 4 to 6 month at 25°C if charged to 25%.
- The battery will normally last for 5 to 9 hours of use on a fully charged battery.

Dimensional drawing, transceiver

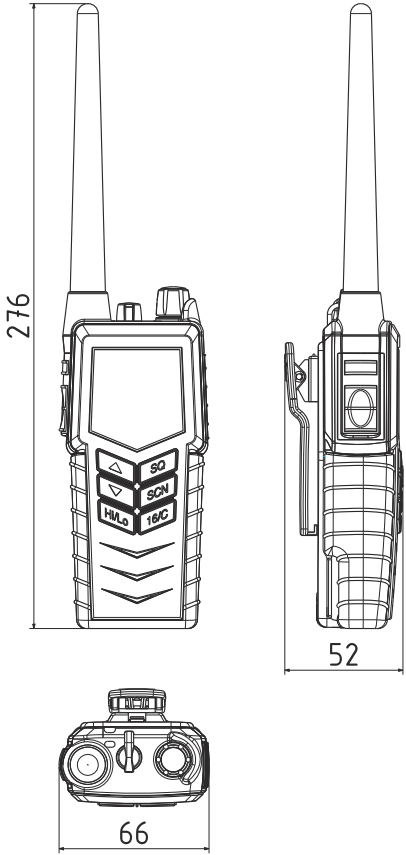

Dimensional drawing, chargers

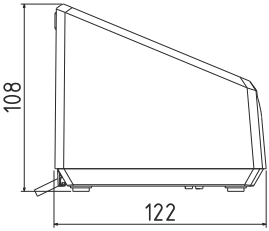

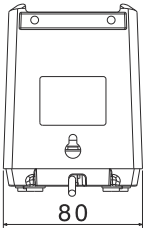

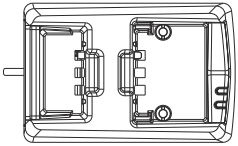

Mounting Possibillities

Desktop mounting, top view

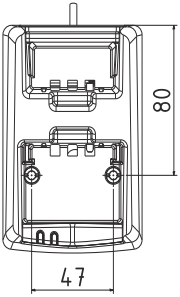

Wall mounting, rear view

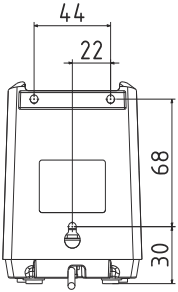

Declaration of Conformity

COBHAM

Thrane & Thrane A/S

Declaration of Conformity with R&TTE Directive

The undersigned of this letter declares that the following equipment complies with the specifications of EC directive 1999/5/EC concerning Radio & Telecommunications Terminal Equipment.

Equipment included in this declaration

SAILOR SP3515	Portable maritime VHF radiotelephone (non GMDSS) or Portable VHF radiotelephone for landmobile use	PN = 623515A
SAILOR B3502	Rechargeable Li-Ion Battery	PN = 403502A
SAILOR CH3507	Battery Charger	PN = 403507B
SAILOR CH3508	Dual Battery Charger	PN = 403508B
	AC/DC Adapter	PN = 88-125538

Equipment Applicability

SAILOR SP3515 is a simplex/semi-duplex handheld VHF radiotelephones designed for maritime communication within the frequency range 148 MHz to 174 MHz.

Declaration

SAILOR SP3515 conforms to the RTTE directive with respect to

Article 3(1)(a)	the protection of health and safety
Article 3(1)(b)	electromagnetic compatibility requirements
Article 3(2)	effective use of the spectrum and avoidance of harmful interference

Which is shown by conforming to EU harmonized standards
EN 301 178-2
EN 60945 Ed 4
EN 60950-1
EN 300 698-3
EN 300 086-2 V1.1.1

Manufacturer

Thrane & Thrane A/S Lundtoftegårdsvej 93D, DK-2800 Kgs. Lyngby, Denmark
Porsvej 2, DK-9200 Aalborg SV, Denmark

Place and Date

Aalborg, 20 June 2013

Chief Financial Officer
Svend Åge Lundgaard Jensen

CE

Document number: 99-125493-E

Thrane & Thrane A/S trading as Cobham SATCOM
Lundtoftegårdsvej 93D, DK-2800 Kgs. Lyngby, Denmark
T +45 39 55 88 00 · F +45 39 55 88 88 · Comp. reg.: 65 72 46 18 · SATCOM.info@cobham.com · cobham.com

Quality Management System
certificate number:
DNV DNV Det Norske Veritas, Veritasveien 1, 1322 Høvik, Norway
DNV EN/EN ISO 9001

Attention

Goretex Membran

To keep the ATEX VHF watertight, is it very important that the goretex membran behind the label under no circumstances must be damaged or removed.